

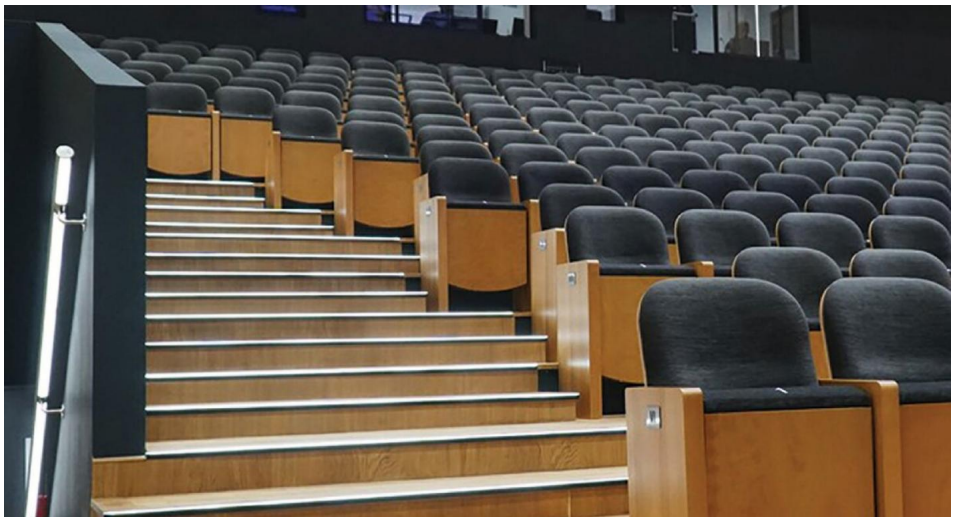

STEKO PLUS ANO1M

Anodised Aluminium 1m
Quicklink: Q7011

General

Colour	Aluminium

Dimensions

Height	26.40mm
Length	1m
Width	40.65mm

The **Steko Plus Step Extrusion Profile** is designed for mounting on the edges of stairs, platforms, etc. It is designed to protect the edges of steps and signal their presence with light.

Mounting of STEKO to the surface is performed by using the appropriate screws with a countersunk head or countersunk oval head. Screw holes in STEKO extrusion are made if necessary in the lines embossed on the top side of the profile. We recommend to keep the distance between the screws within 120 mm.

From the top side of the extrusion the holes should be bevelled so that the screw heads are far below the upper edge of the grooving.

There is a channel in the profile designed for the fitting of side-emitting LED strips. LED strip width is 6mm. The channel for LEDs is closed with a clear silicone string that acts as a cover. The diameter of the silicone string allows it to be tightly mounted.

In case the profile comes in contact with water or moisture the LED strip should be placed in a sealing sleeve.

The channel for LEDs, after they have been fitted, can also be sealed with a properly selected silicone.

LEDs can be mounted in the channel so that their light is directed at the silicone string; then, light spots are visible, but the light will be more intensive.

LEDs can also be fitted in such a way that they shine down the channel; then, you can obtain the effect of a line of light and the lighting effect is soft toned.

STEKO extrusion has a channel for the power cable in the front of the extrusion. To lead the power cable from the LED strip to the channel for the cable, you need to drill a hole in the required place, on the internal side of the profile.

Product Video

t: +44 (0)20 8874 2234 e: info@mr-resistor.co.uk **www.mr-resistor.co.uk**

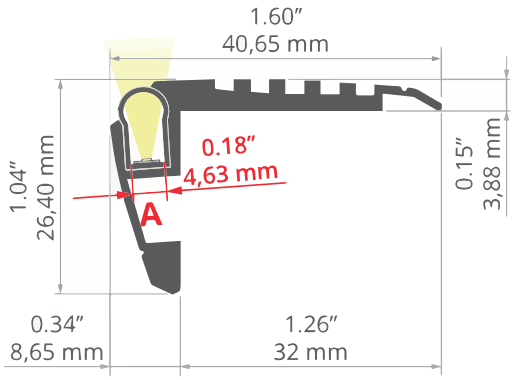

t: +44 (0)20 8874 2234 e: info@mr-resistor.co.uk www.mr-resistor.co.uk