



ENDURA WALL RG

12W Rock Grey
Quicklink: Q6FD7

The **Endurance pillar light** combines contemporary design with exceptional durability, making it ideal for gardens, pathways, patios, and coastal properties.

Featuring a distinctive round ribbed finish and an elegant downlight effect, it creates a warm, atmospheric glow while enhancing outdoor spaces. With an IP65 rating and seaside-grade construction, Endura is built to withstand harsh weather conditions. Finished with a premium 1000-hour salt spray powder coating, the Endurance Light offers enhanced corrosion resistance and long-lasting protection, making it especially suitable for coastal, marine, and exposed outdoor environments.

General

Cap	ES / E27
Colour	Grey
Construction	Aluminium
IK Rating	IK07
IP Rating	IP65
Weight	1.2kg

Dimensions

Diameter	121mm
Length	165mm

Electrical

Maximum Wattage	12W
Voltage	240V

t: +44 (0)20 8874 2234 e: info@mr-resistor.co.uk **www.mr-resistor.co.uk**

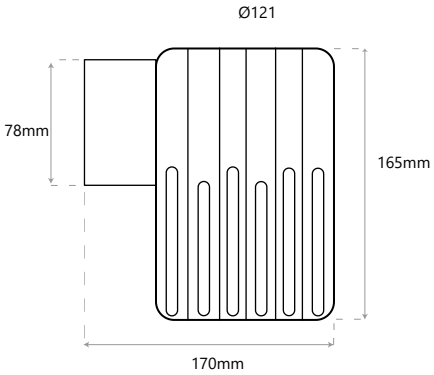

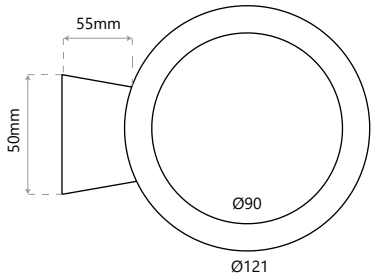

t: +44 (0)20 8874 2234 e: info@mr-resistor.co.uk www.mr-resistor.co.uk