CODY WHITE

White 15W
Quicklink: Q5E1B

General

Cap	GU10
Colour	White
Construction	Metal
IP Rating	IP20

Dimensions

Cable Length	1500mm
Depth	200mm
Height	429mm
Horizontal Rotation	350°
Vertical Rotation	90°
Width	200mm

Electrical

Maximum Wattage	15W
Voltage	240V

Introducing **Cody Bedside Light** - the ultimate space-saving solution that combines sleek design with unparalleled functionality. This multifunctional bedside wall lamp is the perfect addition to any modern home or office, offering a minimalist yet highly practical design that is sure to impress.

With its convenient shelf, Cody is the ideal choice for anyone who needs to keep their essentials within arm's reach while in bed.

But that's not all - Cody also comes equipped with a handy USB port underneath the lamp, allowing you to charge your phone or other device with ease. And with its adjustable lamp head, you can easily direct the light exactly where you need it most.

Crafted from high-quality materials and designed with practicality in mind, Cody is the ultimate lighting solution for anyone who wants to maximise their space without sacrificing style. Its compact design and sleek aesthetic make it the perfect addition to any bedroom, while its versatile functionality ensures that it is always there when you need it most.

t: +44 (0)20 8874 2234 e: info@mr-resistor.co.uk **www.mr-resistor.co.uk**

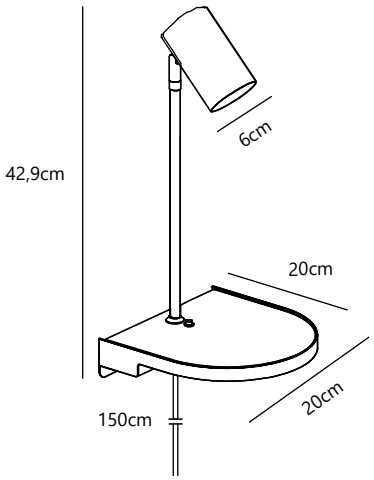

t: +44 (0)20 8874 2234 e: info@mr-resistor.co.uk www.mr-resistor.co.uk